LABORATORY FAUCET - SINGLE

Z82900-WM

TAG _____

Engineering Specifications: Zurn AquaSpec® Z82900
Polypropylene single wall-mounted laboratory faucet with an integral shank, a needle point valve and a 5-3/4" [146mm] rigid gooseneck spout. Unit is furnished with a serrated nozzle outlet and a 1/2" NPSM male mounting shank and locknut.

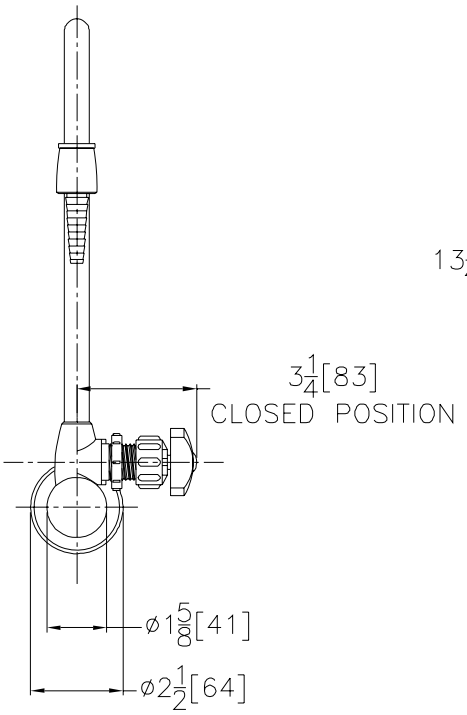

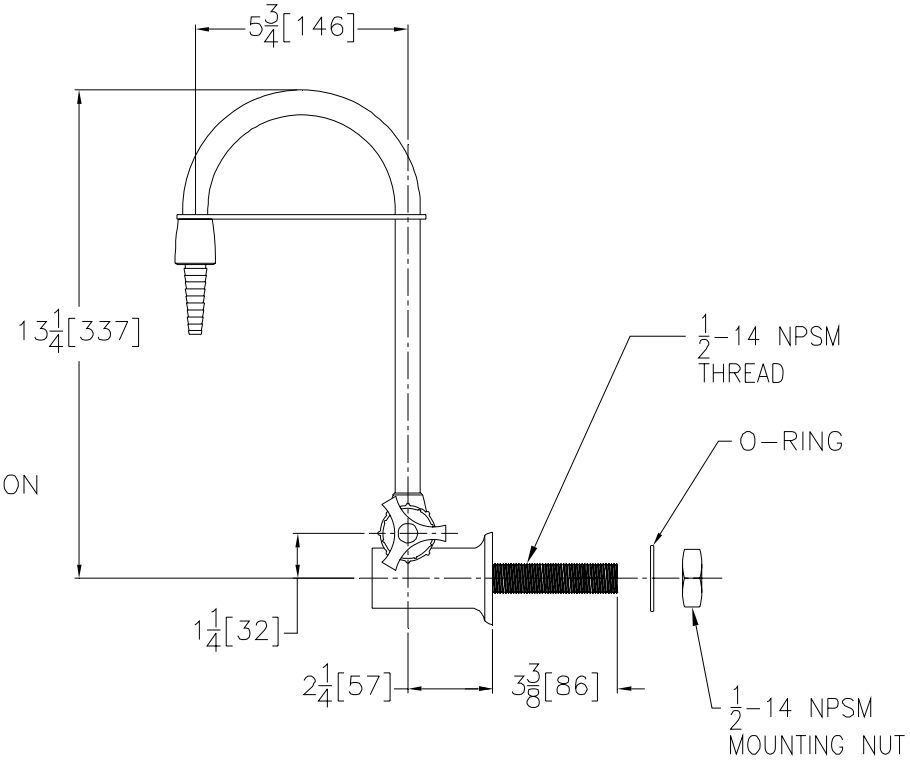

Note: All dimensions are for reference only. Do not use for pre-plumbing.

OPTIONAL ACCESSORIES

No options required

ZURN INDUSTRIES, INC. ♦ COMMERCIAL BRASS OPERATION ♦ 2640 SOUTH WORK STREET ♦ FALCONER NY 14733
Phone: 1-716-665-1132 ♦ Fax: 1-716-665-1135 ♦ World Wide Web: www.zurn.com
In Canada: ZURN INDUSTRIES LIMITED ♦ 3544 Nashua Drive ♦ Mississauga, Ontario L4V1L2 ♦ Phone: 905/405-8272 Fax: 905/405-1292

AquaSpec® is a registered trademark of Zurn Industries, Inc.
©2006 Zurn Industries, Inc.

Rev. B Date: 8/7/06 C.N. No. 104850
Dwg. No. 62786 Product No. Z82900-WM